TKH-MOUSE-SCROLL-IP68-WHITE-LASER
INDUMOUSE

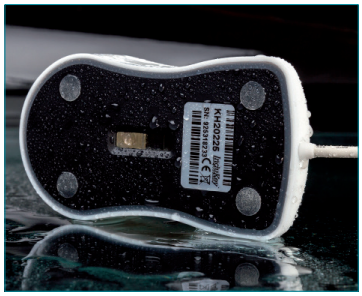

PRODUCT FEATURES

- Medical grade mouse with plastic bottom plate and laser sensor
- Ergonomic shape with two mousebuttons and three-button scroll function
- Due to the symmetric shape it‘s suitable for right-hand and also left-hand operation
- Comfortable touch and operation
- Completely water and dust proof
- An USB protection cap protects the USB connector during cleaning against splash water
- Easy to clean and to disinfect
- Antimicrobial additive: Nano-Silver-additive is added to the silicone and prevents the growth of microbes and germs
- Resolution adjustable in four levels from 400 to 1600 cpi

SPECIFICATION

Number keys:	5
Housing:	silicone
Bottom panel:	plastic
Colour:	white
Keyswitch technology:	short travel keys
Operating principle:	laser
Resolution:	400, 800, 1200 oder 1600 cpi (adjustable)
Scrollfunction:	3 scrollbuttons
Protection level (max):	IP68
Interface:	USB
USB compatibility:	compatible with USB 2.0
Cable length:	approx. 2 m
Operating temperature:	-25 °C to +70 °C
Storage temperature:	-25 °C to +80 °C
Dimensions:	116 x 62 x 38.6 mm
Weight:	160 g
Certifications:	CE, RohS, REACH, EMC
Warranty:	4 years on the electrical function

Art.No.	Product description
KH20225	TKH-MOUSE-SCROLL-IP68-WHITE-LASER-USB

Other configurations and interfaces on request.

Subject to modifications and errors

GETT Gerätetechnik GmbH
Mittlerer Ring 1 | 08233 Treuen | Germany
Tel: +49 37468 660-0
Fax: +49 37468 660-66
E-Mail: info@gett.de
Internet: www.gett.de

Gett North America LLC
E-Mail: info@gett-na.com
Internet: www.gett-na.com

Gett Asia Ltd.
E-Mail: info@gett-asia.com
Internet: www.gett-asia.com

TECHNICAL DRAWING

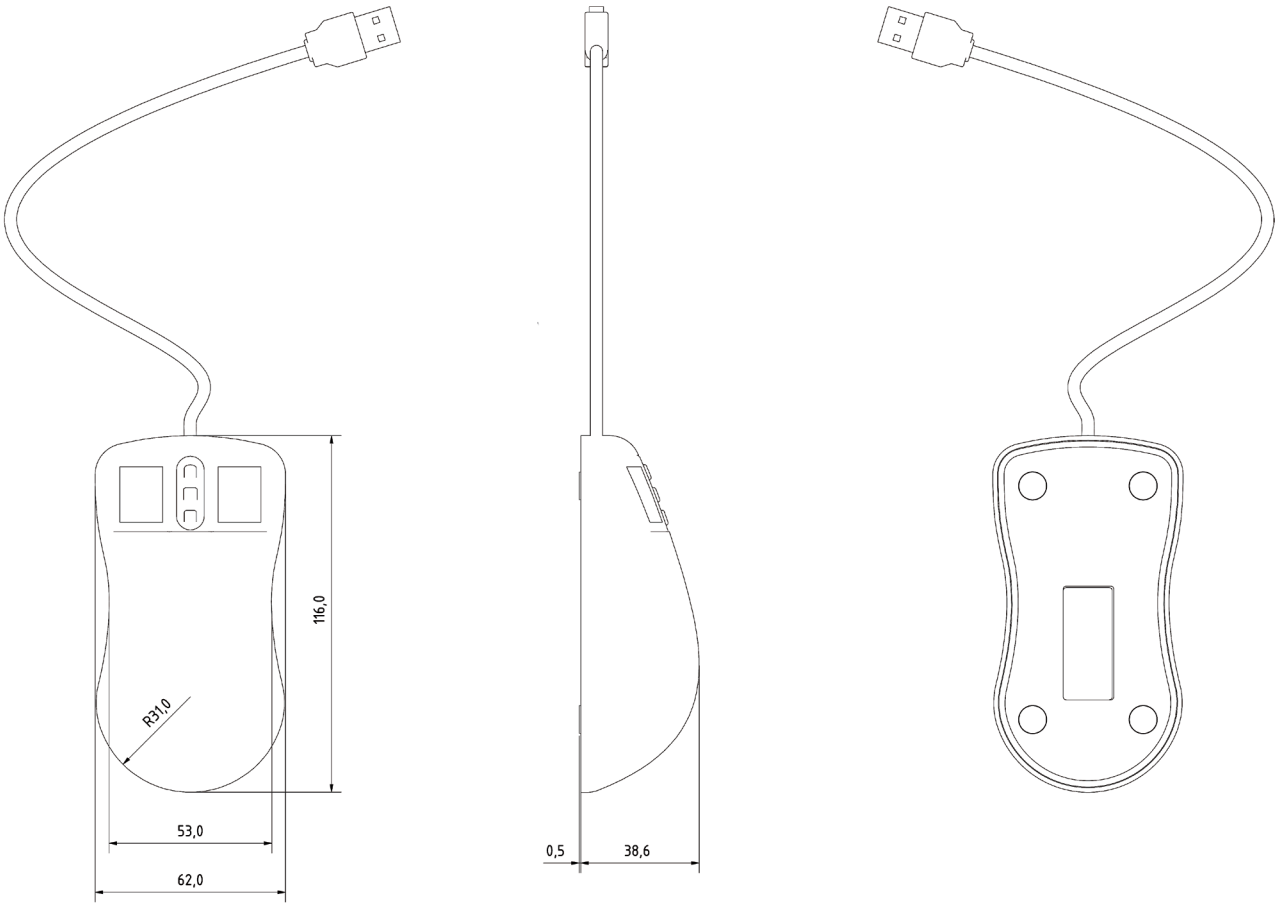

Mouse functions when using standard Windows® drivers

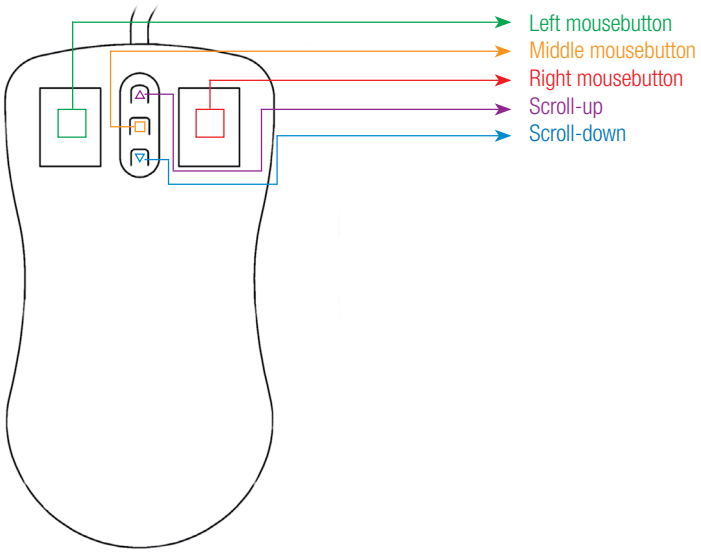

Resolution adjustment:

Resolution is adjustable in 4 levels: 400, 800, 1200 and 1600 cpi.
Keep left and right mousebutton pressed at once and adjust the resolution with the scrollbuttons:

* Scroll-up button: higher resolution
* Scroll-down button: lower resolution

Subject to modifications and errors

GETT Gerätetechnik GmbH
Mittlerer Ring 1 | 08233 Treuen | Germany
Tel: +49 37468 660-0
Fax: +49 37468 660-66
E-Mail: info@gett.de
Internet: www.gett.de

Gett North America LLC
E-Mail: info@gett-na.com
Internet: www.gett-na.com

Gett Asia Ltd.
E-Mail: info@gett-asia.com
Internet: www.gett-asia.com